NANORACKS

NanoLab Experiment Workshop Overview

Michael D. Johnson

October 5, 2012

Cape Canaveral

SPACE FLORIDA

Welcome to NanoRacks

We started NanoRacks to create a commercial environment for economical space utilization. It is vital for America to have a cost-efficient means to utilize the space environment. We utilize plug and play, miniaturization, standardization and commercial practices to assure space operations for today's challenges.

NanoRacks Operations

Launch

Delivery

On-Orbit Operations

Return

Landing

Retrieval

Receive At NanoRacks

ISS Overview

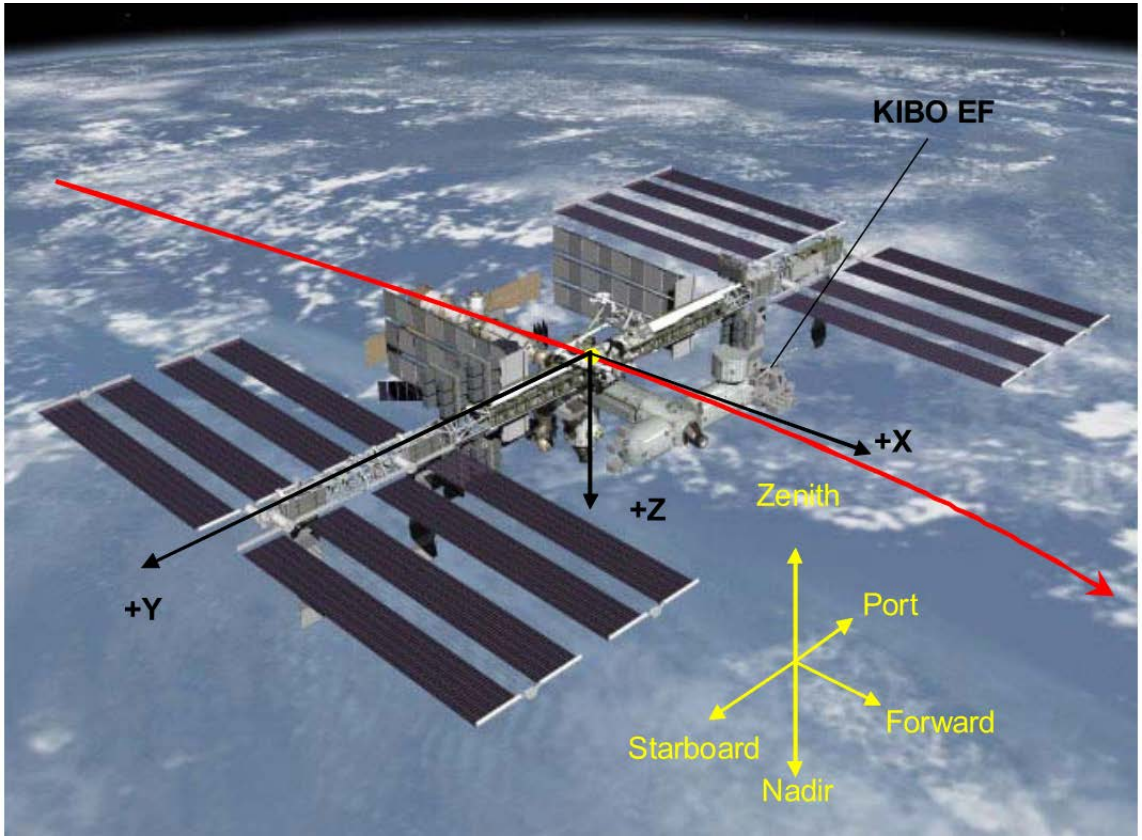

ExPRESS Rack Overview

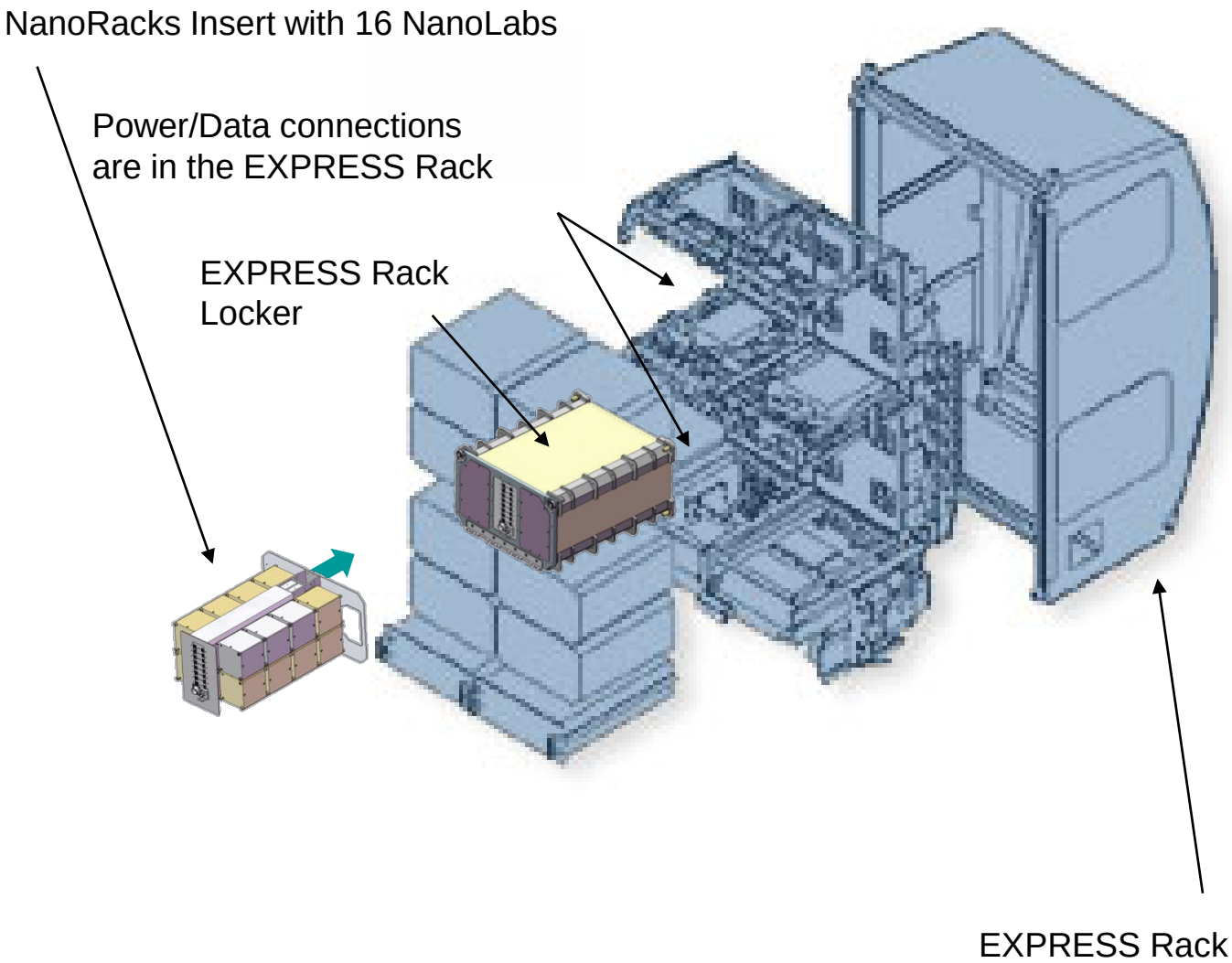

NanoRacks Platform 1 / 2 Overview

Tray Operation

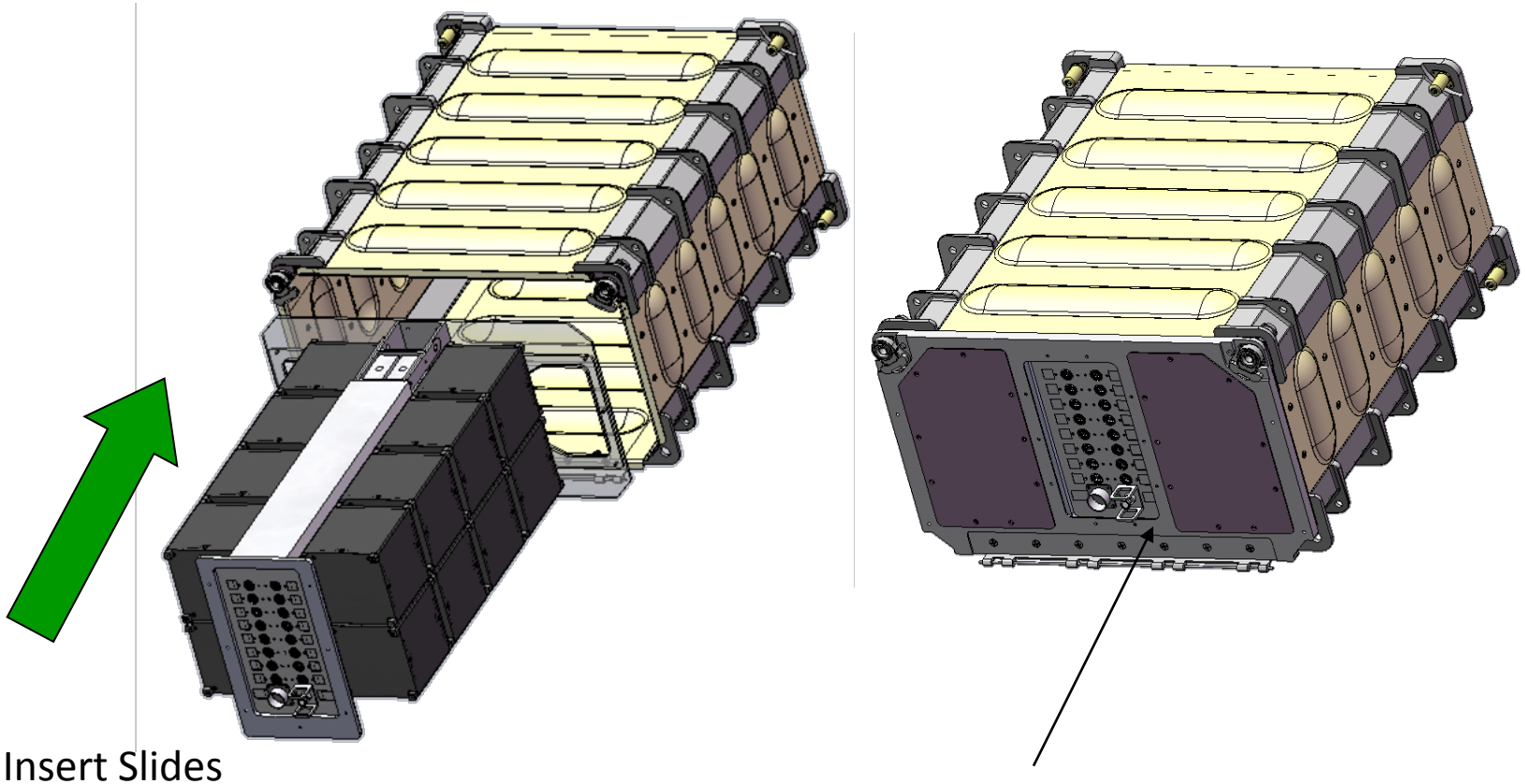

Insert Slides Into Locker

Middle Locker Door Panel Removed

NanoRacks Platform 1 / 2 Overview

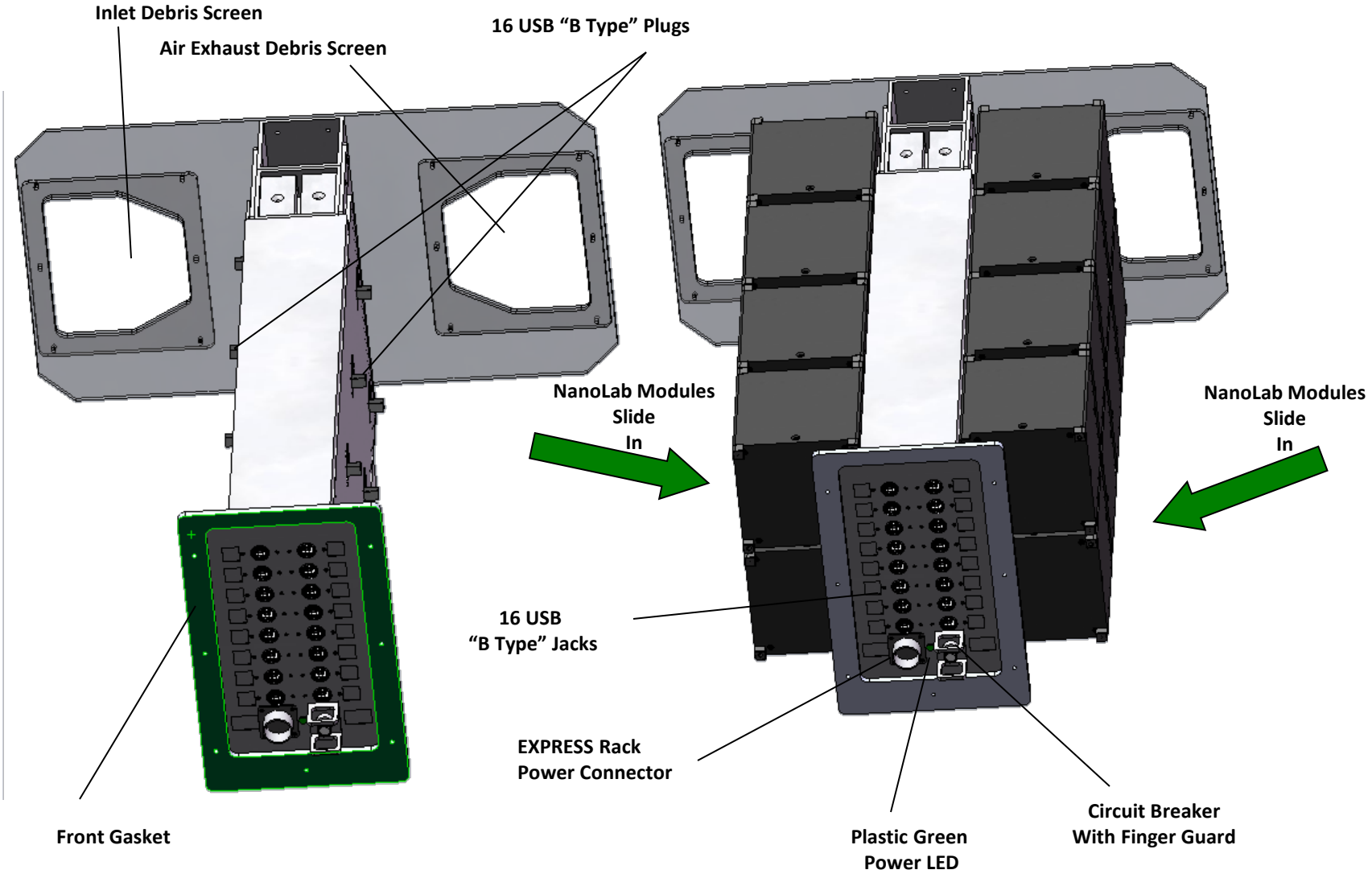

NanoRacks Cooling Overview

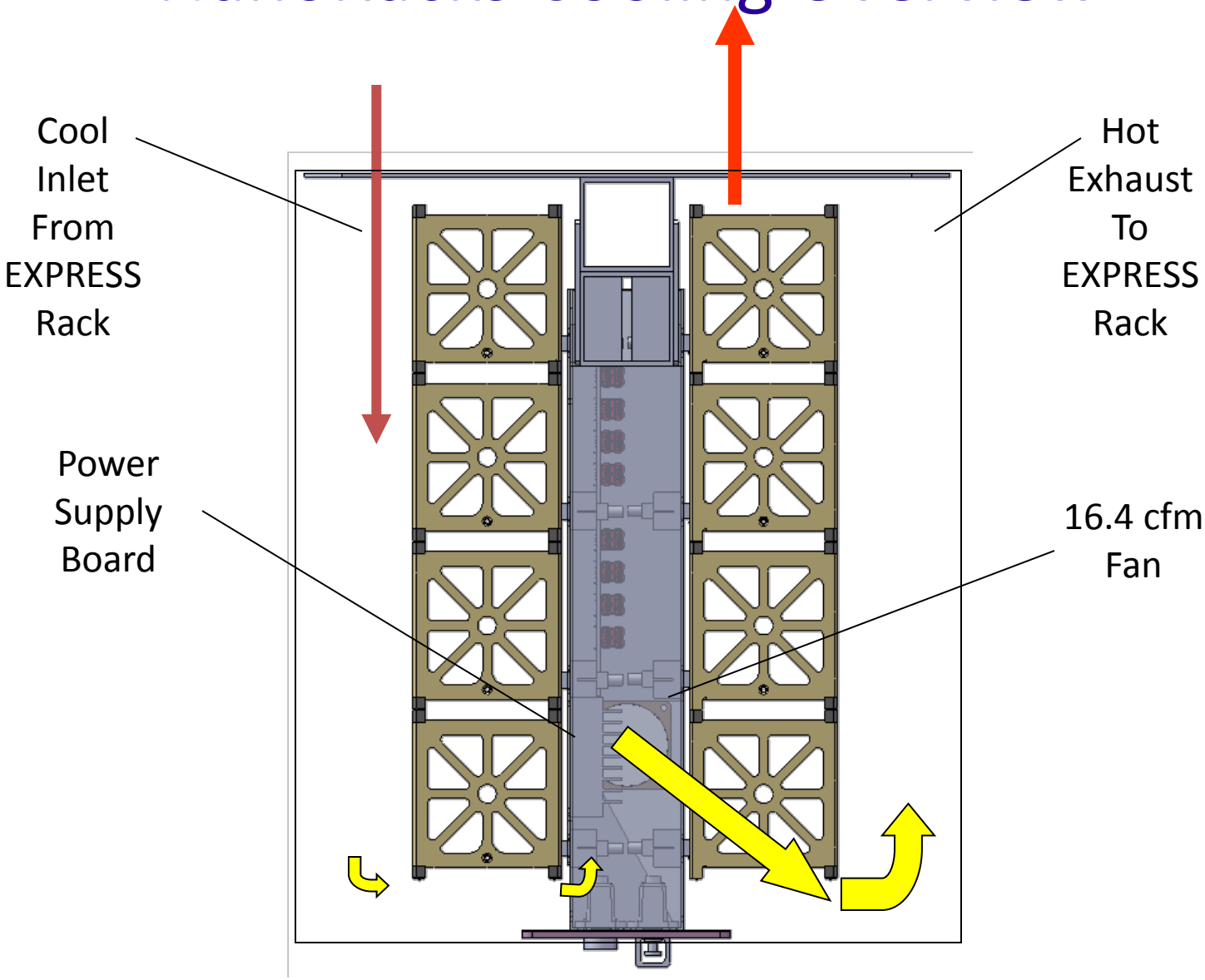

NanoLab Kit Overview

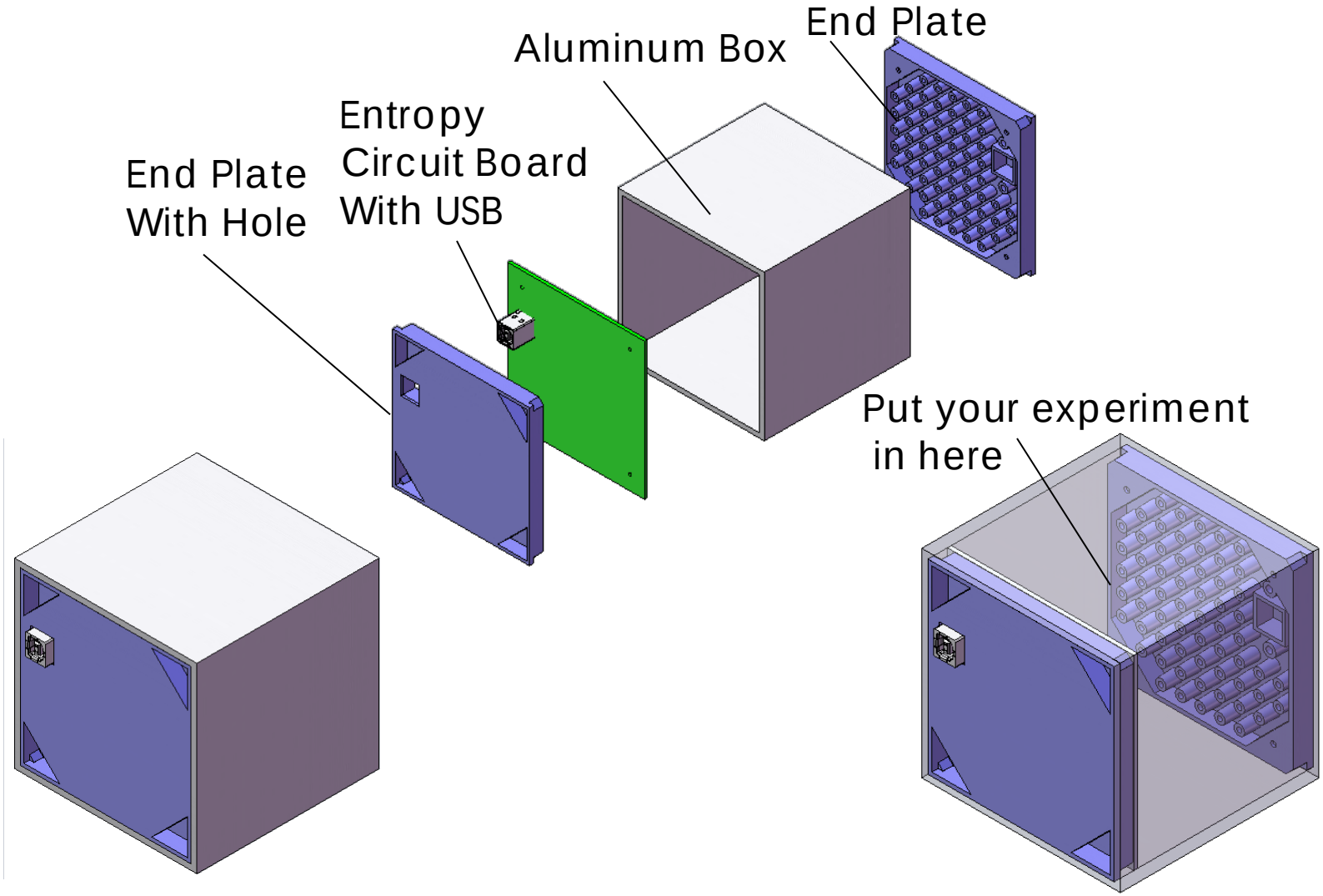

NanoLab Design Process

Step 1: Know your design space

Volume

1U = 10cm x 10cm x 10cm
2U = 20cm x 10cm x 10cm
3U = 30cm x 10cm x 10cm
4U = 40cm x 10cm x 10cm
2x2U = 20cm x 20 cm x 10 cm
2x3U = 20cm x 30cm x 10cm
2x4U = 20cm x 40cm x 10cm

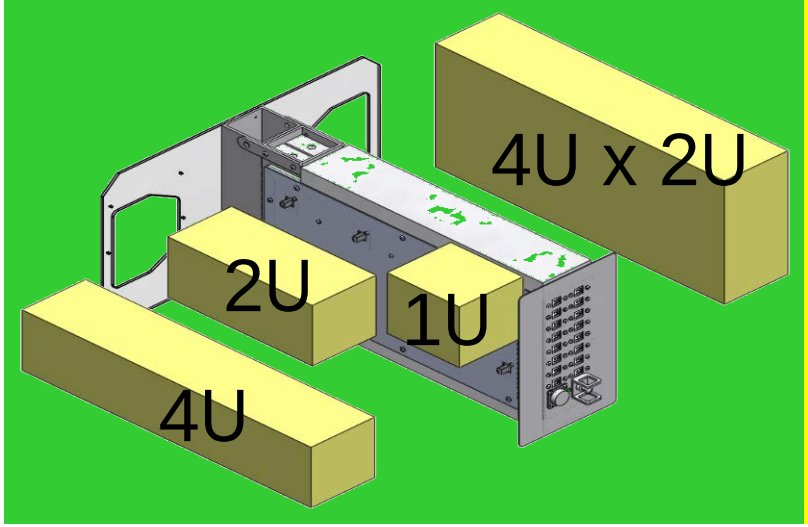

Mass

1U = 1kg
2U = 2kg
Up to
8U = 8kg

Power

1U = 2W max (5VDC, 400mA)
2U = 4W max (5VDC, 800mA)
Up to
8U = 16W max (5VDC, 3.2A)

Data

- Each 1U has a USB Type B female connector that supplies 5VDC, 400 mA and USB data connectivity
- Collected data is transferred to a laptop computer in near real time
- Commanding files can be transferred from the ground to laptop to payload

NanoLab Design Process

Step 2: Come up with a payload for your NanoLab

Space Research Areas

Microgravity
- Fluid Science/Fluid Handling
- Soil Mechanics Science
- Metal Solidification/Alloys
- Vapor/Liquid Phase
- Combustion Science
- Life Sciences
- Plant Growth
- Microbiology
- Small animal/insect research
- Crystal Growth
- Protein Crystal Growth
- Astronaut Tools
- Low gravity research

Space Environment
- Radiation measurement
- RF studies
- Magnetic fields

Spacecraft Hardware Qualification
- In-space testing of components
- In-space testing of systems

Keep the Mass Low

Box is aluminum or polycarbonate

Keep the Power Low

Use the Crew to do things

USB Devices

- Microcontroller
- Flash memory

Sensors
- Camera
- Spectrophotometer
- Microphone
- Accelerometer
- Gyroscope
- Temperature Sensor
- Humidity Sensor
- Air Flow Sensor
- Pressure Sensor
- Capacitance
- RF Sensor
- Resistance
- Magnetic

Actuators
- Magnetic Motor
- Solenoid
- Piezoelectric
- Thermal
- Capacitive
- Speaker
- LEDs/LCDs
- Flag indicators
- Galvanometer
- Valves
- Heater
- Peltier cooler

NanoLab Design Process

Step 3: Jam your payload into a NanoLab Module

Example 1: Valley Christian High School 2U Plant Growth System
(All USB Microcontroller driven, crew downloads data)

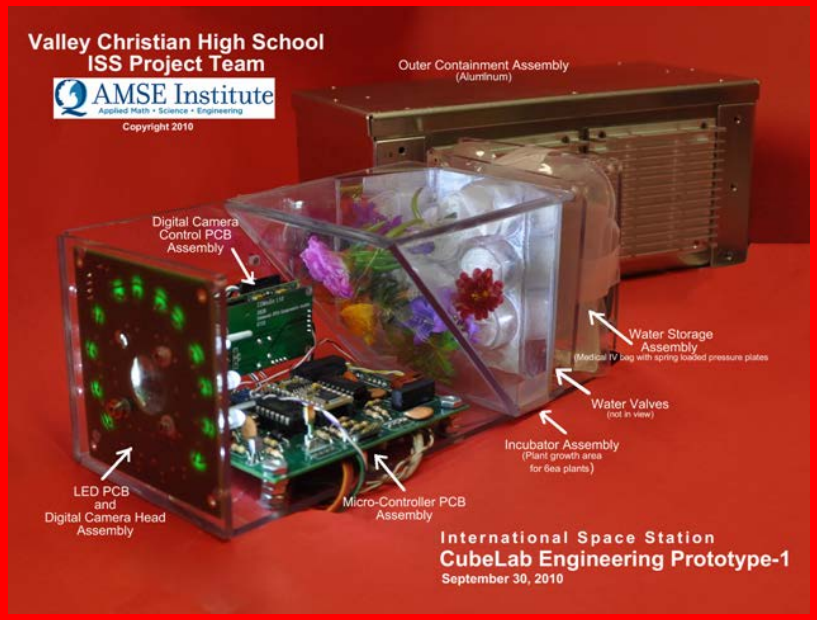

Example 2: OSU 2U Crystal Growth Experiment
(No power, 24 crew activated lightstick-like units)

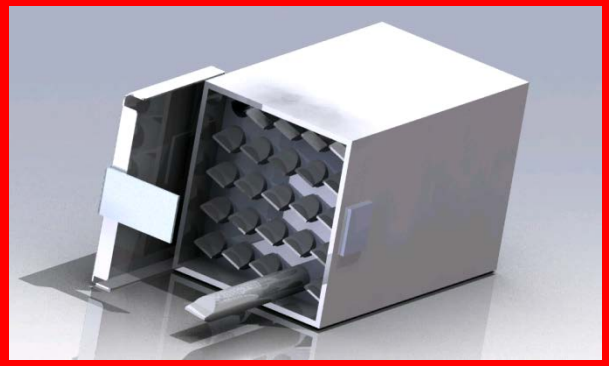

NanoLab Design Process

Step 4: Show NanoRacks your NanoLab Payload Design

Step 5: Make final design modifications

Step 6: NanoRacks performs NASA Safety Review and Verification Activities

Step 7: NanoRacks flies and helps you operate your payload

Step 8: You get your data and/or your payload back from space

Step 9: Repeat

Conclusion

- Design your NanoLab Payload
- Sign up for Space Florida solicitation for NanoLab Payloads
- Fly your NanoLab Payload
- Publish your research

www.nanoracks.com